EH-3535LEJV0113W

Feature

·Packaging glue: colorless transparent silica gel

·Packaging bracket:3535 emc

·Luminous color: Infrared (invisible light) wavelength 940nm

·Chip specification: 42mil*42mil

·Luminous Angle: 60 degrees

·Electrostatic sensitive material

Applications

·Infrared applications systems

·Infrared Illumination for cameras

·Secunrity monitoring

·Wireless communication

Package Dimensions/尺寸參數

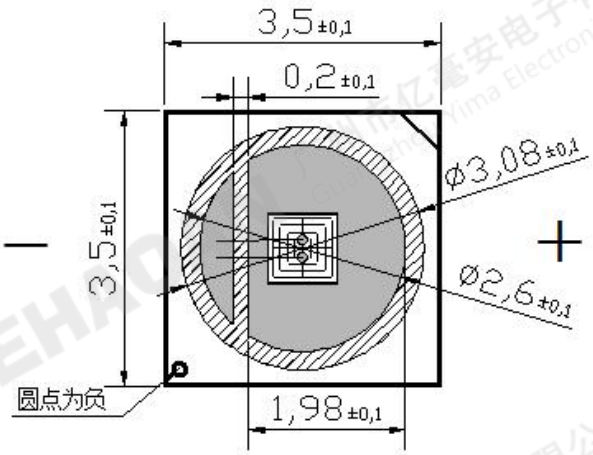

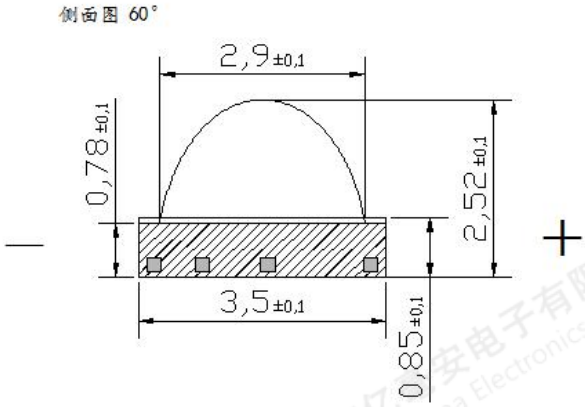

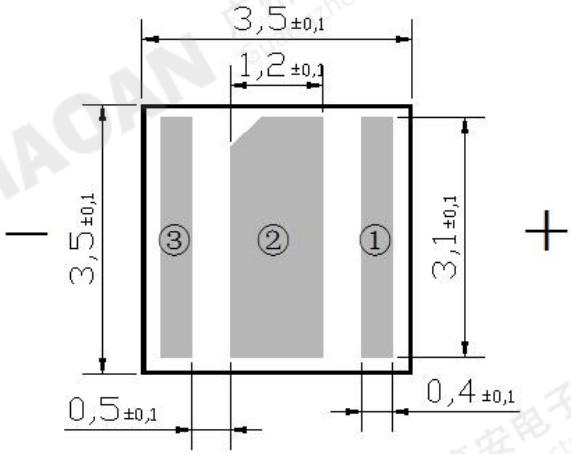

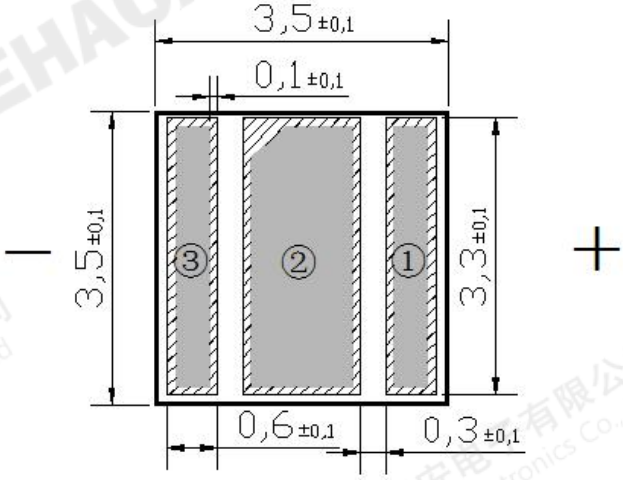

备註 Notes :

1.所有尺寸均為 All dimensions are in millimeters : mm

2.尺寸誤差 Dimension error:0.1mm (0.004inch)

Absolute Maximum Ratings /最大限度參數值(Ta=25°C)

參數名稱 Parameter	符號 Symbol	最大額定值 Rating	單位 Unit
正向電流 Forward Current	I_F	≤1000	mA
反向電壓 Reverse voltage	V_R	10	V
峰值電流 Peak Forward Current	I_{FP}	1000	mA
耗散功率 Power Dissipation	P_m	90	mW
工作溫度 Operating Temperature	T_{sop}	-25～+85	℃
存儲溫度 Storage Temperature	T_{stg}	-0～+40	℃
回流焊溫度 Circle solder Temperature	T_{sol}	245℃ for 5sec	℃
结溫 complete Temperature	T_j	115	℃

Opto-Electronical Specification/主要光電參數

參數名稱 Parameter	符號 Symbol	最小值 Min.	標準值 Typ.	最大值 Max.	單位 Units	測試條件 Conditions
光功率 Luminous power	P_o	160	----	----	mW	I_F=350mA
		290	----	----		I_F=1000mA
光強 Luminous intensity	I_e	135	150	165	mW/Sr	I_F=350mA
		280	315	350		I_F=1000mA
視角 View Angle	2θ1/2	----	120	----	deg	I_F=350mA
波長 Wavelength	λ_p	925	940	955	nm	I_F=350mA
半波宽 Half wave width	$\Delta\lambda$	----	60	----	nm	I_F=350mA
正向電壓 Forward Voltage	V_F	1.4	----	2.1	V	I_F=350mA
		1.5	----	2.3		I_F=1000mA
反向電流 Reverse current	I_R	----	----	10	μA	V_R=5.0V

Typical Characteristics Curves/曲線參數

Fig.1 – Relative Radiant Flux vs. Forward Current

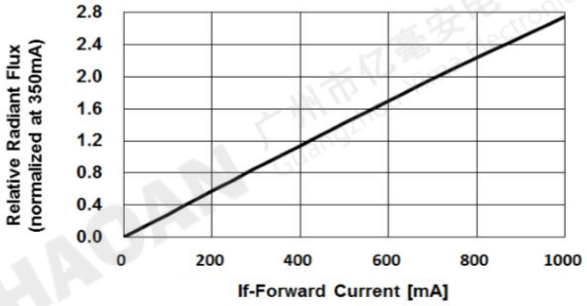

Fig.2 – Forward Current vs. Forward Voltage

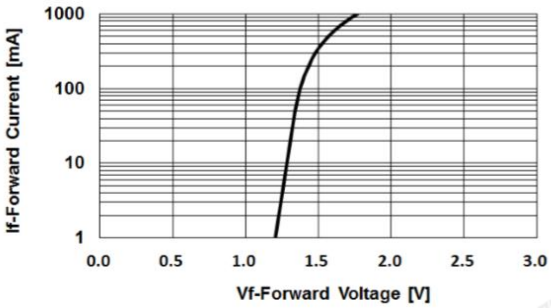

Fig.3 – Relative Radiant Flux (@350mA) vs. Ambient Temperature

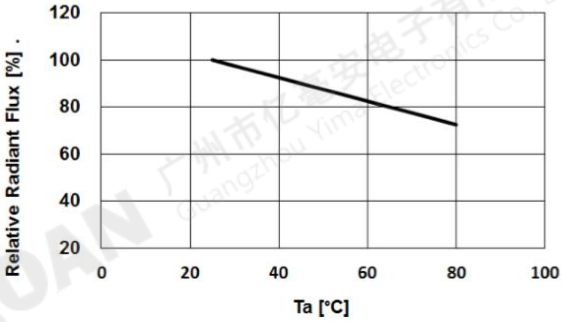

Fig.4 – Forward Voltage (@350mA) vs. Ambient Temperature

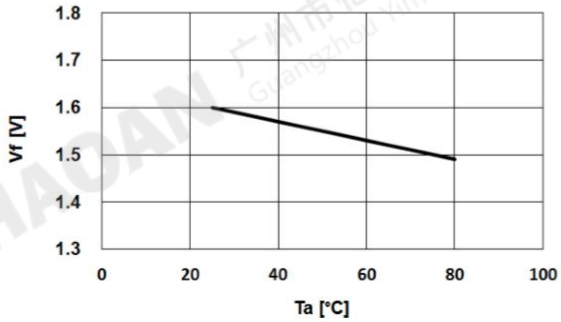

Fig.5 – Peak Wavelength (@350mA) vs. Ambient Temperature

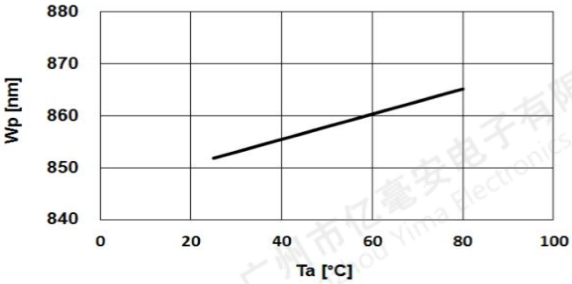

Fig.6 – Maximum Driving Forward DC Current vs. Ambient Temperature (De-rating based on Tj max. = 115°C)

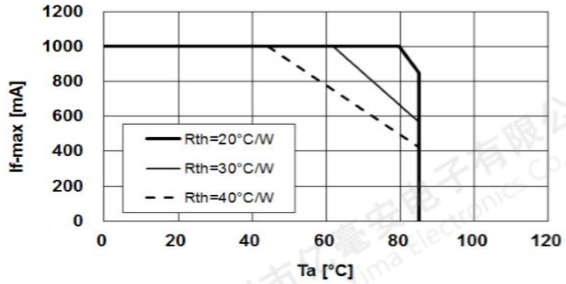

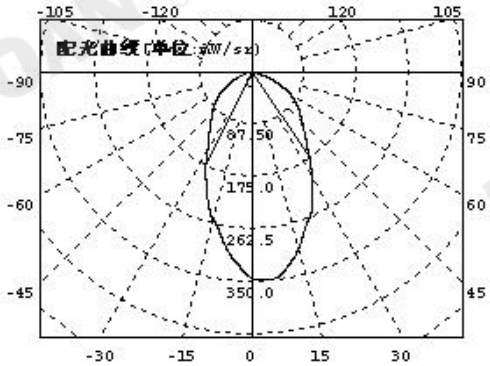

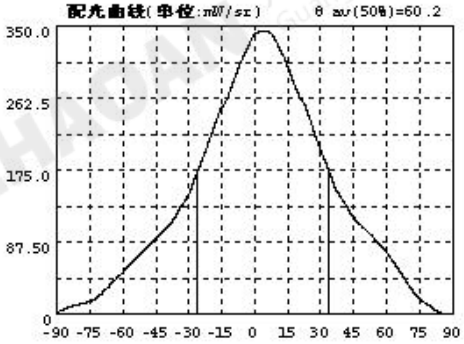

Reliability Test/可靠性試驗

测试项目 Test Parameter	参考标准 Reference Criterion	测试条件 Test Condition	时间 Time	数量 Quantity	接受/拒收 Ac/Re
回流焊 Resistance to Soldering Heat	JESD22-B106	Temp:245℃ max T=10sec	3 times	22Pcs	0/1
温度循环 thermocycling	JESD22-A104	100℃±5℃ 30min.	100 Cycles	22Pcs	0/1
高温保存 High Temperature storage	JESD22-A103	Temp:100℃ ±5℃	1000Hrs	22Pcs	0/1
低温保存 Low Temperature storage	JESD22-A119	Temp:-40℃ ±5℃	1000Hrs	22Pcs	0/1
常温通电 Operating Life Test	JESD22-A108	Ta=25℃±5℃ IF=1000mA	1000Hrs	22Pcs	0/1
高温高湿通电 High Temperature High Humidity	JESD22-A101	85℃±5℃/85% RH IF=1000mA	1000Hrs	22Pcs	0/1

CRITERIA FOR JUDGING THE DAMAGE/判斷標準

项目 Parameter	符号 Symbol	测试条件 Test Condition	判定标准 Judgement standard	
			最小 Min	最大 Max
正向电压 Forward Voltage	VF	IF=350mA	--	U.S.L*) ×1.2
反向电流 Reverse current	IR	VR=10V	--	U.S.L*) ×2.0
辐射强度 Luminous intensity	mW/sr	IF=350mA	L.S.L*) ×0.7	--

Packaging Specifications/包装规格

Dimensions of Tape /載帶尺寸(Unit: mm)

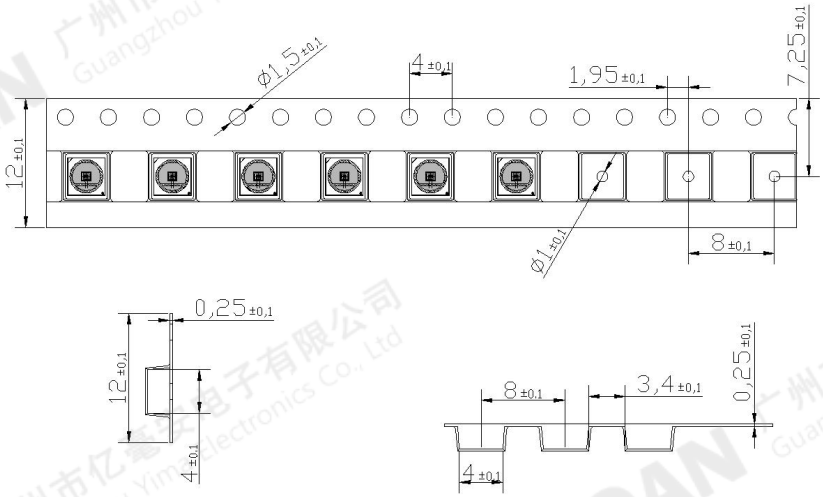

Dimensions of Reel /捲軸尺寸(Unit: mm)

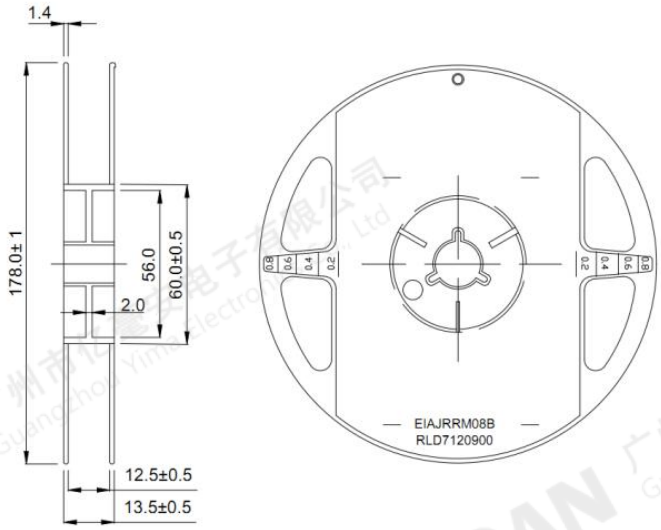

备注：每卷数量 1000PCS

Notes:1000 pcs/ reel

Notes/注意事项

保存及使用 Preservation and use:

在打開包裝前，LED 應存放在 30℃/60%RH 或以下的環境中。打開包裝後，LED 應置於 20-30℃/30%RH 或以下的環境中使用。

Before opening the package, the LED should be stored at 30℃/60%RH or less.After opening the package, the LED should be placed in an environment of 20-30℃/30%RH or less.

molding 封裝及 SMD LED 開封後要在 24H 之內使用，為了避免環境的影響，建議拆封後，經 過 60℃/24H 除濕，沒用完 LED 需及時做抽真空包裝處理，避免再次使用時發生失效。

To avoid the impact of the environment, it is recommended to dehumidify after unpacking at 60℃/24H. All the leds are needed to be vacuumed to avoid failure

若干燥劑褪色或過期使用，需乾燥烘烤：60±5℃/24 小時。

If the desiccant faded or expired use, dry baking: 60±5℃/24 hours.

LED 的膠表面易沾灰塵，需要做好相關防塵措施。

LED Glue surface easy to dust, need to do the relevant dust prevention measures.

取放 pick and place

夾取 LED 時只能觸及支架體，鑷子之類的工具不要對透鏡施壓。更不要刺或推透鏡。

When taking the LED, you should only touch the bracket. Tools such as tweezers should not put pressure on the lens.Don't stab or push the lens.

熱量處理 Heat treatment

在過大電流驅動時 LED 的 Tj（節點溫度）會超過期限制值，這導致 LED 的壽命嚴重縮短，熱量 處理措施要有效的減小應用產品的熱阻。比較通用的做法：把 LED 封裝器件安裝在金屬基質的 PCB 板上。1W LED 產品要求金屬基板的表 面散熱面積至少 30cm²（3W 產品建議 80cm²以上），且其導熱係數要高於 2.0W/mK。LED 和金 屬基板結合靠導熱性較好的導熱膠，要求導熱係數高於 1.0W/mK，厚度小於 100um。

When driven by excessive current, the Tj (node temperature) of LED will exceed the period limit value, which leads to a serious shortening of LED life. Thermal treatment measures should effectively reduce the thermal resistance of application products.Common practice: install LED packages on metal matrix PCB boards.1W LED products require the surface heat dissipation area of the metal substrate to be at least 30cm squared (over 80cm squared is recommended for 3W products), and its thermal conductivity is higher than 2.0w /mK.LED and gold substrate are combined by thermal conductive adhesive with good thermal conductivity. The thermal conductivity coefficient is required to be higher than 1.0w /mK and the thickness is less than 100um.

清潔 Clean

需要清潔的話，用乾淨的軟碎布沾點酒精輕力擦除異物，不可以採用諸如丙酮之類的清潔劑以免可能造成腐蝕破壞。

If you need to clean, use a clean, soft cloth dipped in alcohol to gently remove foreign matter. Do not use a cleaner such as acetone to avoid possible corrosion damage.

電性注意事項 Electrical precautions

LED 不允許反向驅動。

Led Reverse drive is not allowed

限流措施是必要的，否則輕微的電壓變化會導致較大的電流變化，可能造成 LED 失效。

Current limiting measures are necessary, otherwise slight voltage changes will lead to large current changes, which may lead to LED failure.

在發光量滿足要求的前提下，推薦採用低於額定電流的驅動電流，這樣有利於提高產品的可靠性。

Under the premise that the luminous quantity meets the requirements, it is recommended to use the drive current lower than the rated current, which is conducive to improving the reliability of the product.

防靜電措施 anti-static precautions

LED 是靜電敏感器件，在保存、使用過程中要採取防靜電措施。 靜電和電湧會導致產品特性發生改變，例如正向電壓降低等，情況嚴重甚至會損毀產品。 所以對於整個工序（生產，測試，包裝等）與 LED 直接接觸的員工都要做好防止和消除靜 電的措施。所有相關的設備和機器都應該正確接地。接地交流電阻小於 1.0 歐姆，工作臺上需墊表面電阻 106-109 歐姆的桌墊。 在容易產生靜電的環境和設備上，還必須安裝離子風扇。作業過程中，操作員需使用防靜電手環，防靜電墊子，防靜電工作服，工作鞋，手套，防靜電容等。

LED is electrostatic sensitive devices, in the process of preservation, use to take anti-static measures.Static electricity and surge can lead to changes in product characteristics, such as forward voltage reduction, which can be serious and even damage the product.So for the whole process (production, testing, packaging, etc.) and LED direct contact staff should do a good job to prevent and eliminate electrostatic measures.All related equipment and machinery should be properly grounded.The grounding ac resistance is less than 1.0 ohm, the table mat with surface resistance of 106-109 ohm is needed on the work table.Ion fans must also be installed in electrostatic environments and equipment.During the operation, the operator should use anti-static bracelet, anti-static mat, anti-static overalls, working shoes, gloves, anti-static capacity.

電烙鐵焊接 An electric soldering iron

建議使用防靜電電烙鐵，尖端處溫度不超過 350℃，每次焊錫時少於 3 秒。電烙鐵的功率宜低於 60W。每焊完一次之後間隔 2 秒以上，分別焊好兩個電極引腳。焊接時不可對透鏡用力施壓。LED 如有問題一般都是從焊錫時開始出現。故必須按要求小心作業。

It is recommended to use anti-static electric soldering iron, the temperature at the tip does not exceed 350℃, less than 3 seconds for each soldering.The power of the soldering iron should be less than 60W.Weld two electrode pins more than 2 seconds after each welding.Do not force the lens during welding.Problems with leds usually begin when they are soldered.So you must work carefully as required.

SMT 回流焊說明 Reflow instructions：

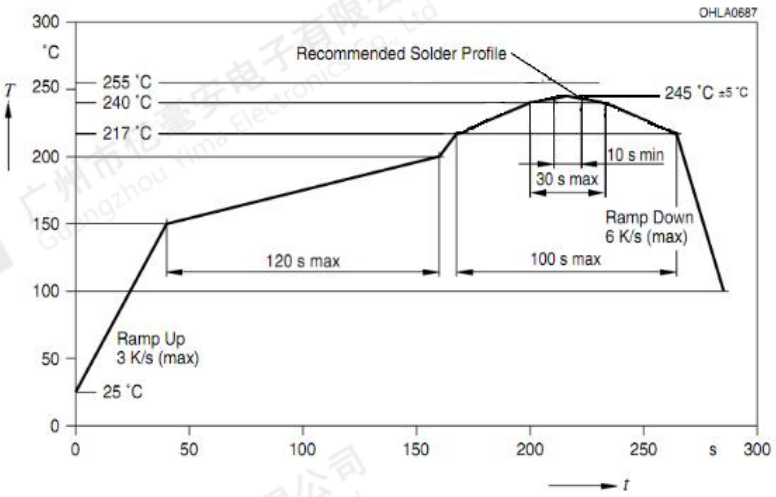

注意事項 matters need attention：

回流焊只允許做一次。

Reflow soldering is only allowed once.

回流焊過程中不要對燈體施加壓力。

Do not apply pressure to the lamp body during reflow

回流焊完成之後不要壓擠散熱板、不可壓到膠體部分。

After reflow welding is completed, do not press the heat dissipation plate, do not press to the colloidal part.

若有比較低熔點的錫膏，TP 可以適當降低。

If there is a lower melting point of solder paste, TP can be appropriately reduced.